INSTALLATION AND MAINTENANCE MANUAL GARAGA INC.

Standard +/ G5000

Standard 138/ G7000

30 pages

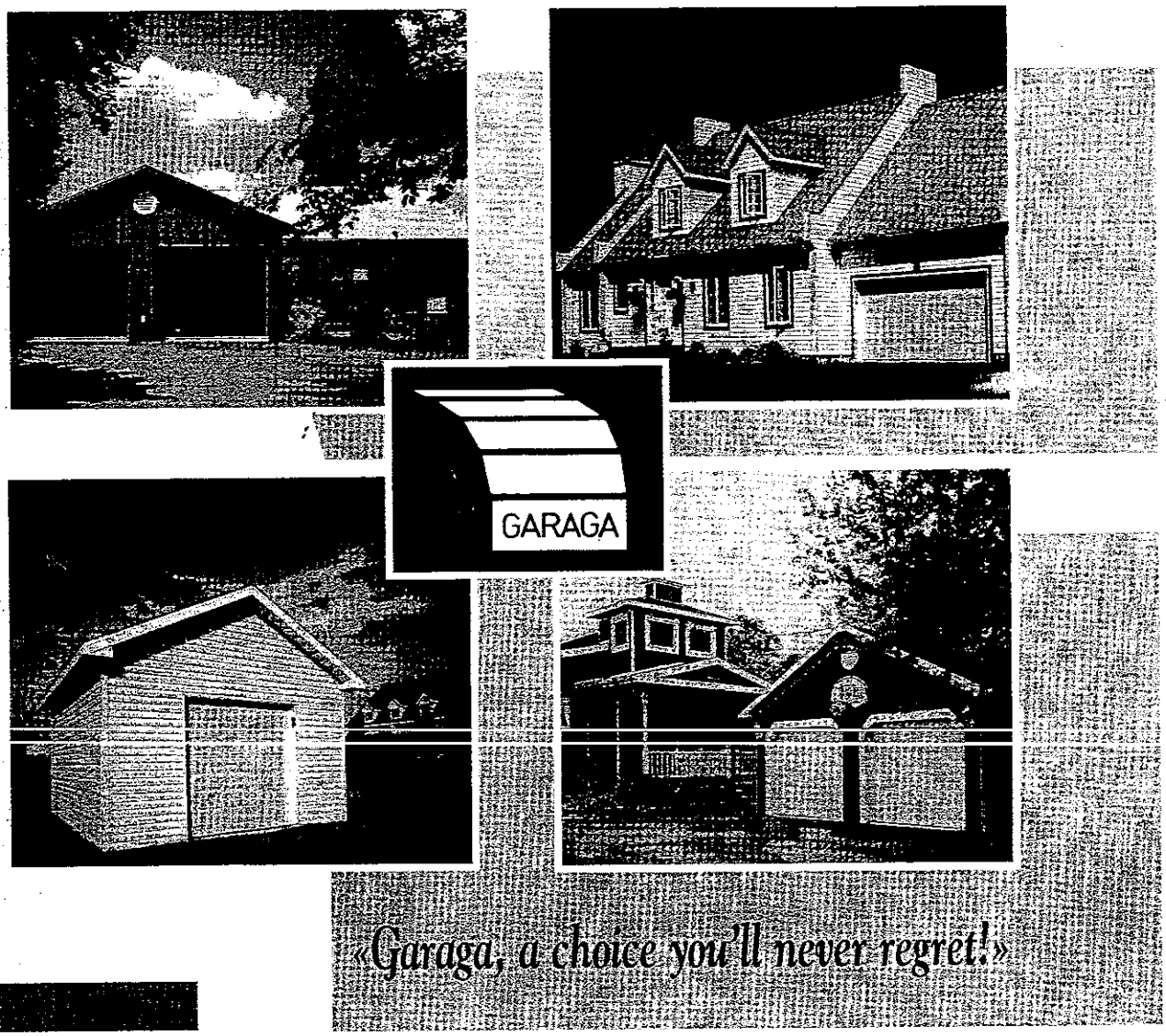

GAR-2005-072003 PRINTED IN CANADA

PRODUCT MANUFACTURED IN CANADA

333, Bayview Drive,
Barrie, ON, Canada L4N 8X9
Phone : 705 733-1173
Fax : 705 733-0663
Web site: www.garaga.com

Distributor

Telephone no.

Installator's name

Date

Serial no.

The serial number identifies your door in manufacturer's archives. We suggest you keep it handy if you need to communicate with your Garaga Distributor.

GENERAL INFORMATIONS
READ CAREFULLY BEFORE
THE INSTALLATION OF YOUR GARAGA DOOR

The installation of a garage door is a considerable job which requires knowledge and preparation. This is why we recommend you hire someone specialized to do the job. In this case, not only does a professional adjust the door perfectly, but he generally guarantees his work. In other words, he is ready to come back and make further adjustments if necessary, within the warranty period.

You can obviously do the installation of your garage door yourself as long as:

- you have a good deal of experience in do-it-yourself;
- you have the right tools;
- you will have help in handling the panels and the pieces of hardware;
- you read the instruction in this document BEFORE starting the installation of the door, not after.

THE INSTALLATION INSTRUCTIONS WHICH FOLLOW ARE MEANT TO BE GENERAL GUIDELINES WHICH CANNOT BE CONSIDERED, UNDER ANY CIRCUMSTANCE, AS IMPERATIVE AND FINAL INSTRUCTIONS AS TO THE INSTALLATION OF A RESIDENTIAL GARAGE DOOR. The manufacturer cannot be held liable in the event of any damage which could result while installing a residential garage door. The sketches you will see further in this booklet are the most precise possible, but differences in details may appear.

Your garage door is the biggest and heaviest mobile part of your house. It must be installed properly in order to work in a safe and reliable way for a long time. If you have any doubts concerning your skills in installing a garage door, do not hesitate to contact a professional.

LIST OF TOOLS AND MATERIALS THAT YOU WILL NEED:

- clamps or locking pliers;
- screwdrivers;
- a level;
- a set of socket wrenches;
- a hacksaw;
- easels;
- screw for weatherstripping;
- perforated steel angle for horizontal tracks hanger;
- a hammer;
- a tape measure;
- a square;
- pliers;
- a stepladder;
- two steel winding rods (12 X 457 mm) (1/2" X 18");

THIS SIGN IS USED REGULARLY THROUGHOUT THIS DOCUMENT. IT MEANS SPECIAL CARE MUST BE TAKEN FOR THE STEP YOU ARE EXECUTING. CARELESSNESS AT ONE OF THESE POINTS COULD MEAN SERIOUS BODILY INJURIES OR HEAVY MATERIAL DAMAGES.

INSTALLATION MANUAL
RESIDENTIAL/COMMERCIAL GARAGE DOORS

Garaga Inc. is manufacturing seven models of residential garage doors: the Top Tech door (smooth steel), H-Tech Plus and H-Tech (rustic woodgrain aluminum), the Standard + with classic raised panels, MIX or XL (light woodgrain steel) and the Standard 138 door, (light woodgrain steel). The installation of different models is similar, but a few details.

THE VERY FIRST STEP IN THE INSTALLATION OF YOUR GARAGE DOOR IS TO IDENTIFY THE MODEL OF THE DOOR YOU JUST PURCHASED, because this guide is basically written for H-Tech and Standard + models. If you purchased a Standard 138 door, you can still use this guide, and as installation instructions will go on, any conception or installation differences, will appear as follow, in a box, with the title Standard 138 clearly displayed.

> **Standard 138**
>
> Installation of a bar lock is impossible on a Standard 138. One has to install a cable-lock, or an end stile lock (see page 27).

In the following pages, you will find detailed instructions for the installation of a sectional garage door along with its hardware whether it comes with torsion springs or extension springs.

In this manual, the right and the left are as seen by looking at the opening of the door from the inside.

All the necessary parts for the installation of your door are provided except for the horizontal track supports (as an option only). We suggest you use a slotted angle of 32 X 32 mm (1 1/4" X 1 1/4"). **GARAGA hardware is easy to recognize by the stamping of the word GARAGA on the tracks and other parts.**

Identify the parts and separate the left ones from the right ones. The parts that need to be separated are the vertical tracks, the horizontal tracks (those with a curve in them), the bottom panel corner brackets, and the cable drums for torsion hardware. All other parts can go on either side. The parts are illustrated in this document when it is time to use them. A complete list of all hardware parts can be found in the hardware box.

You will find life-size illustrations of the screws, nuts, and bolts in this manual as you need them.

The hinges are identified by a number indicating on which panel they must be used. This number is engraved at the bottom of each hinge.

On one end of the panel, there is a factory stamp identifying the panel. This stamp indicates the position of the panel in the door, the interior side of the panel, as well as the serial number of the door. The interior side of the lower panel also bears the same serial number.

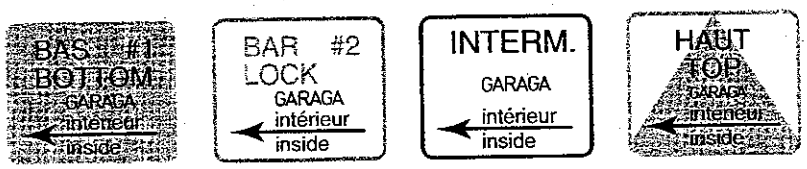

There are some orange stickers stuck on the interior side of the door, in the lower part of the panels. These show the locations of the steel reinforcement plates used for screwing in the central hinges, the handles, the electric garage door opener in the top panel, as well as the wood block for the main lock in the panel identified "inter bar-lock" (see central page for further explanations about these plates). The orange stickers on the lower part of the panels also indicate there are similar reinforcement plates on the top of the panel. A punch mark indicates exact location of the screw holding the hinge.

Standard 138

The panels of Standard 138 are all identical, and may used at any location in the door. You only have to follow the instructions related to "interior – exterior" of the door.

SPECIAL SAFETY NOTES

- The springs used in opening and closing a garage door are mainly there for supporting most of the garage door weight. This means that there is a lot of tension in these springs and that any sudden and uncontrolled release of these springs is dangerous and could cause serious injuries.
- There are two kinds of springs used: either extension springs or torsion springs. (See page 4 for illustrations of both systems.)
  - For either one of these spring systems, always use clamps locking pliers to block the door and prevent it from movin.
  - For torsion springs, always use a solid steel rod of 12 X 457 mm (1/2" X 18") to add or release tension; never use a screwdriver because it could easily slip and cause an accident.
  - The wood block used as a base for the torsion spring anchor plate must be solidly fastened to the wall because it will be supporting the tension of the springs. Never try to move or modify this block while there is tension in the springs because a sudden release of tension could cause serious injuries.
  - For extension springs, make sure there is no tension in the springs by blocking the door at its highest position before proceeding to spring adjustments.
  - For extension springs, always use safety cables to compensate for a brocken hook or spring which could otherwise release the spring like a cannonball across the garage.
- The rear hangers of the horizontal tracks must block the tracks both ways to keep the same distance between them, and hold the tracks from the ceiling.

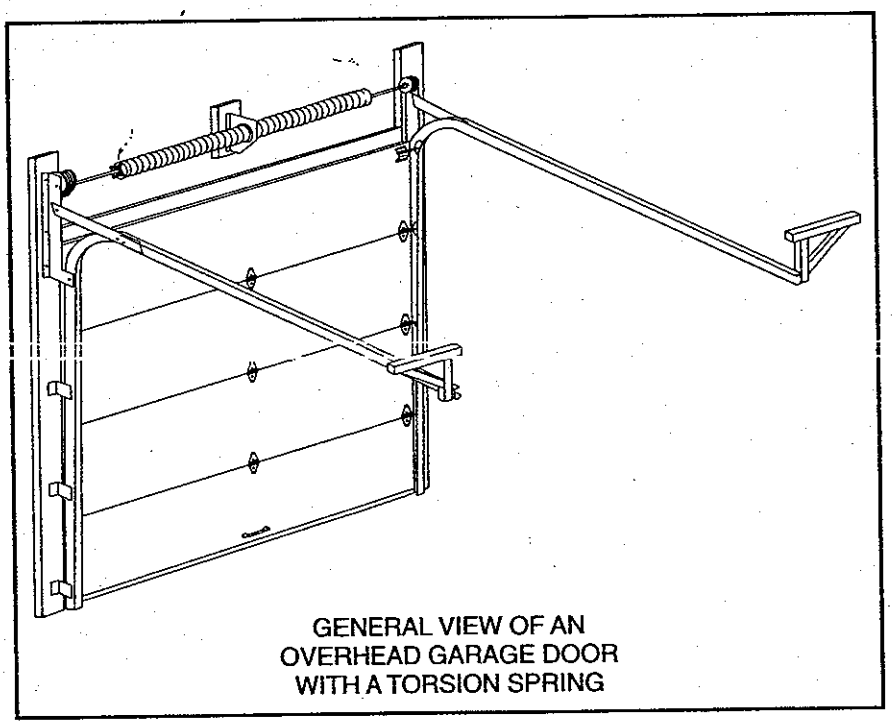

GENERAL VIEW OF AN
OVERHEAD GARAGE DOOR
WITH A TORSION SPRING

LOCATION OF STEEL PLATES AND WOOD BLOCKS FOR SCREWING HINGES AND HANDLES
Top Tech, H-Tech and Standard + models

4) top section

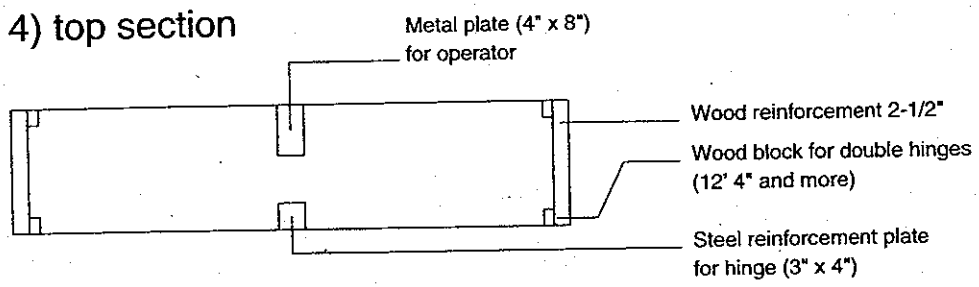

3) intermediate section

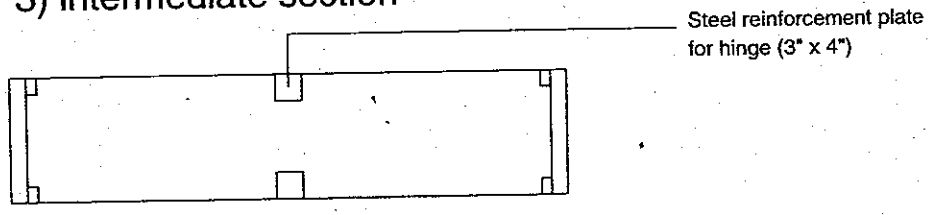

2) bar-lock section

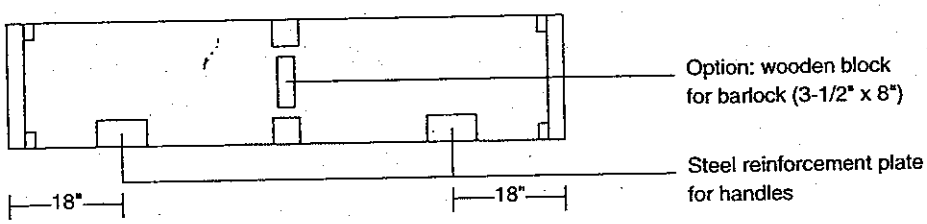

1) bottom section

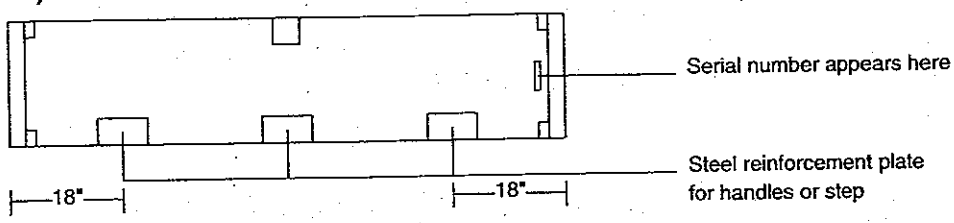

Note: Orange stickers do not indicate the exact location of plates. Light punch holes do.

LOCATION OF STEEL PLATES AND WOOD BLOCKS FOR SCREWING HINGES AND HANDLES
Standard 138 models

5'-0", 8'-0" and 9'-0" (1524, 2438 and 2743 mm) wide

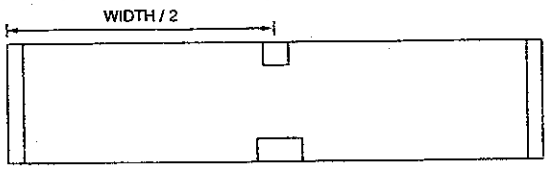

10'-0" and 12'-0" (3048 and 3658 mm) wide

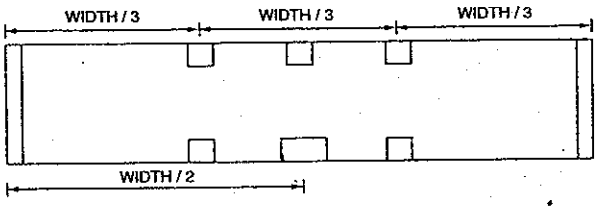

14'-0" and 16'-0" (4267 and 4877 mm) wide

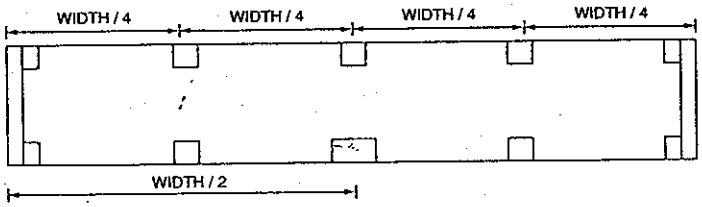

Steel plate 14 g, 3" x 4"

Steel plate 14 g, 8" x 4"

Note: to attach the electrical operator, we recommend to use a special bracket (see page 31)

SAFETY ADVICE STICKERS

IMPORTANT: Place safety stickers above the bottom bracket, to remind it is dangerous to handle the springs, the cables and bottom bracket.

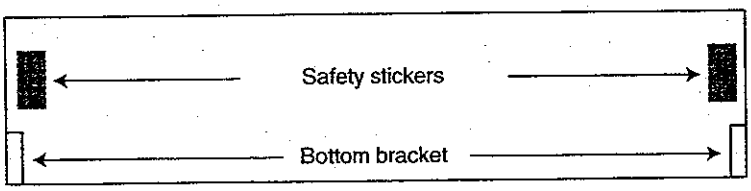

WHERE TO USE SCREWS AND LAGS

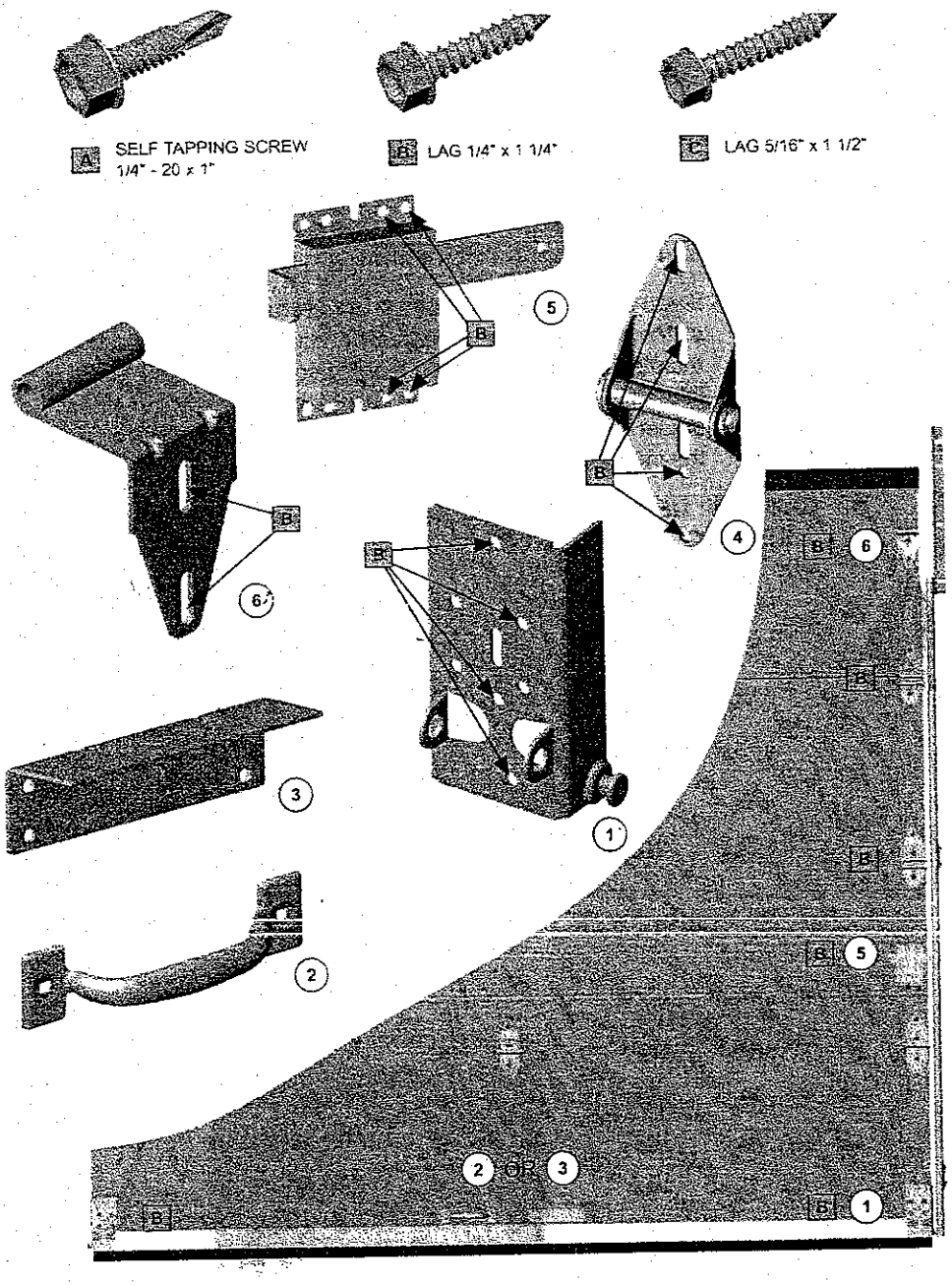

HANDLE AND STEP PLATE

A handle, for interior or exterior use, and a step plate for interior are supplied in the hardware parts box.

If you have a walk-in door, the exterior handle is not necessary : even with a power failure, you will be able to close the door from the inside of the garage. If you are operating the door manually, it is safer to install an handle at the exterior and a step plate at the interior to avoid any injury.

See drawing below for installation

1. fix the handle and the step plate at the center of the door, on the reinforcement plate indicated with an orange sticker (see page 5 for location of those plates).
2. If you are installing the **handle only**, at the interior of the garage, fix it to the plate with the self tapping screws.
3. If you are installing the **step plate only** at the interior of the garage, fix it to the plate with the self tapping screws.
4. If you are installing the **step plate at the interior and the handle at the exterior**, use carriage bolts and nuts in the bottom holes of the step plate, and the self tapping screws in the top holes in the interior of the garage. In this case, locate the reinforcement plate, adjust the step plate to it, and pierce holes through the door from the interior.

CAUTION: NEVER OPEN OR CLOSE THE GARAGE DOOR BY INSERTING YOUR FINGERS IN THE JOINTS BETWEEN THE PANELS

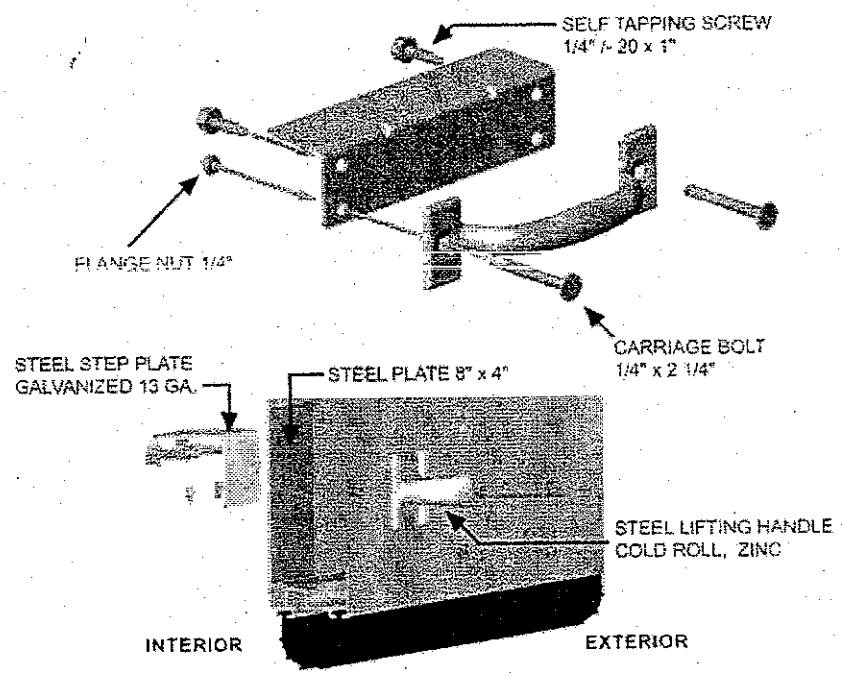

IF THIS IS A FIRST INSTALLATION, AND NOT THE REPLACEMENT OF A DOOR, GO TO PAGE 11.

HOW TO REMOVE YOUR OLD GARAGE DOOR

You might have decided to install your new garage door to replace an existing door for one of the following reasons: easier maintenance, better insulation, lighter weight, nicer appearance, or any other reason.

If you are replacing an existing door, you will no doubt have to replace some other parts, might it be only screws for the hinges or worn-out rollers. You will almost certainly have to change the springs since their size and strength are based on the weight of the door. The weight of a wood door, an aluminum door, and a steel door differ greatly.

It is important to understand that the springs used in opening and closing a garage door are mainly there for supporting most of the garage door weight. This means that there is a lot of tension in these springs and that any sudden and uncontrolled release of these springs is dangerous and could cause serious injuries.

The first and most important step in the disposal of a garage door is the release of the tension in the springs.

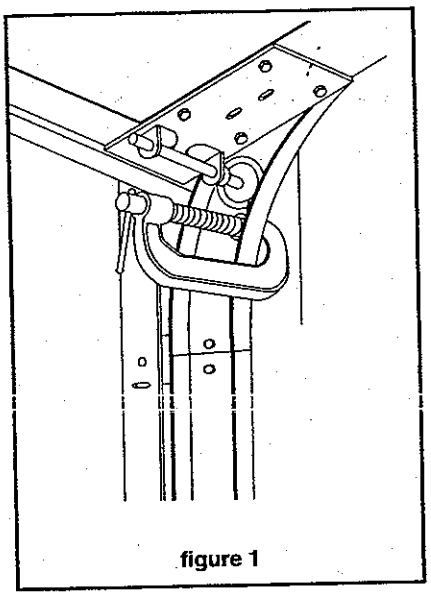

figure 1

THE DISPOSAL OF EXTENSION SPRINGS

For extension spring hardware, the tension in the springs disappears almost completely as soon as the door is completely opened.

Open the door completely and block it in this position with clamps or locking pliers firmly tightened to the track to prevent the door from closing. (See figure 1)

You can now release the cables and take off the springs without any trouble nor danger.

Then, take off the clamps or the locking pliers and close the door.

DO NOT EXECUTE THIS STEP ALONE. REMEMBER: A GARAGE DOOR WHICH IS NOT LINKED TO A SPRING WEIGHS ITS REAL WEIGHT AND THAT TRYING TO HANDLE IT ALONE COULD BE DANGEROUS.

We suggest you place a wood block under the door before closing it so as to not get your fingers caught.

You can now undo the panels of your door starting by the top panel.

THE DISPOSAL OF TORSION SPRINGS

The removal of the torsion springs is a little more complicated. It is very important to follow these instructions carefully because the uncontrolled release of a torsion spring could turn out to be very dangerous.

First of all, **lock** the door in the **CLOSED** position. You can either use the locks installed on the door or use clamps or locking pliers as shown in Figure 1.

Then block the spring shaft with locking pliers leaning against the wall (header) as shown in Figures 2 and 3. Then, insert one of the winding rods into one of the holes of the winding cone, **HOLD IF FIRMLY TOWARDS THE TOP**, and unscrew the pressure screws which are found there.

WARNING! AS SOON AS THESE SCREWS ARE LOOSENED, ALL THE TENSION IN THE SPRING WILL GO TO THE WINDING ROD; IT IS REALLY IMPORTANT TO KEEP THIS ROD VERY TIGHT SO AS TO AVOID A SUDDEN RELEASE OF THE SPRING.

Let the spring slowly unwind towards you and then insert the other winding rod in the hole at the top. **Take out the bottom one only when the top one is well-inserted and held firmly in your hand.** Continue this procedure until there is no tension at all left in the spring. Repeat the same steps on the second spring, if need be.

Release the cables and then take off the clamps or locking pliers.

You can now undo the panels of your door starting by the top one.

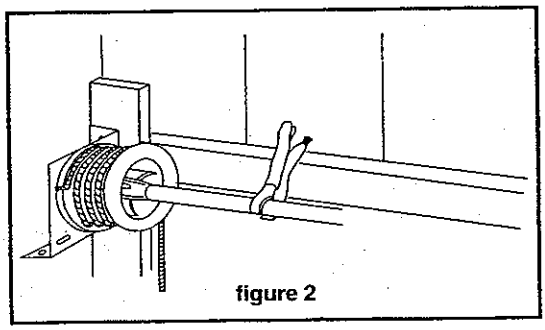

figure 2

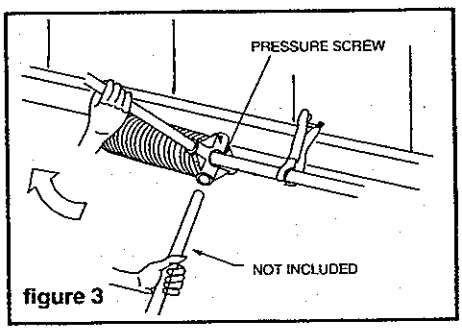

figure 3

HOW TO INSTAL
YOUR GARAGE DOOR

STEP 1
GETTING THE OPENING READY

Make sure that the size of the opening matches the size of the door. For example: a door of 2,743 X 2,134 mm (9' X 7') needs an opening of 2,743 mm (9 feet) wide by 2,134 mm (7 feet) high.

The position of the header and back jambs are very important. The header must be flush (on the same plane) with back jambs. The back jambs must be perpendicular, plumb, and square. (Figure 4)

Check headroom and rear clearance of the door so as to have enough room for the door to work properly (Figures 4 and 5).

STOP

An overhead door imparts complex stresses to a building structure and requires correct framing techniques to avoid premature hardware failure.
Do not attempt to install an overhead door directly onto a building's structural framework (studs). Do not install overhead door hardware onto drywall even if there is sufficient backing. (The drywall will crumble under pressure, causing the hardware to loosen away from the wall.)

FIGURE 1. DOOR MOUNTING FRAME, (WOOD)

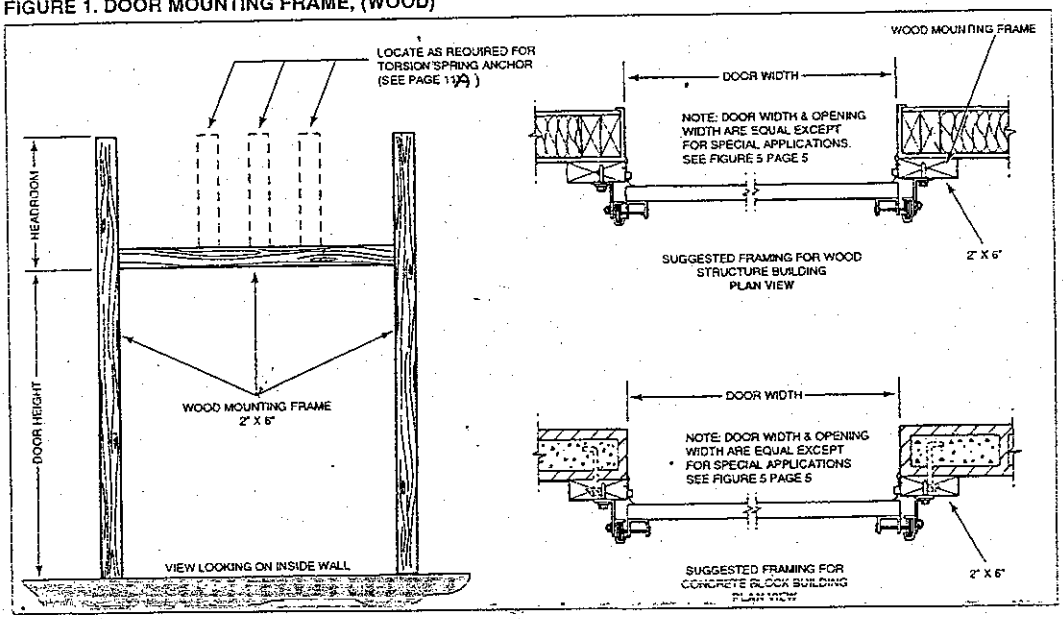

FIGURE 2. DOOR MOUNTING FRAME, (STEEL)

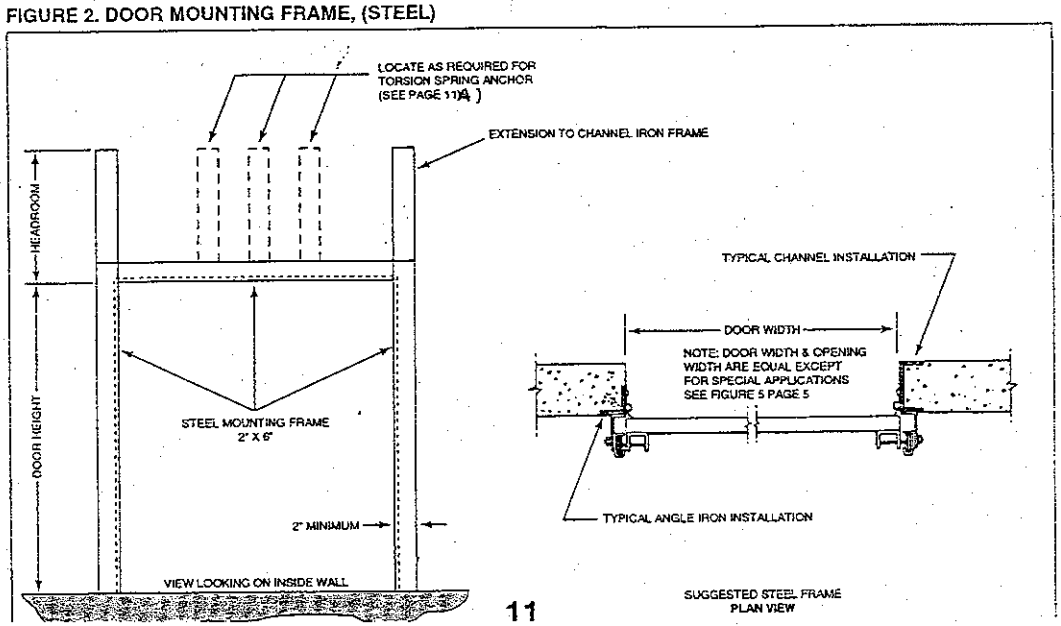

FIGURE INSTALLATION OF TRACK BRACKETS TO STEEL JAMBS.

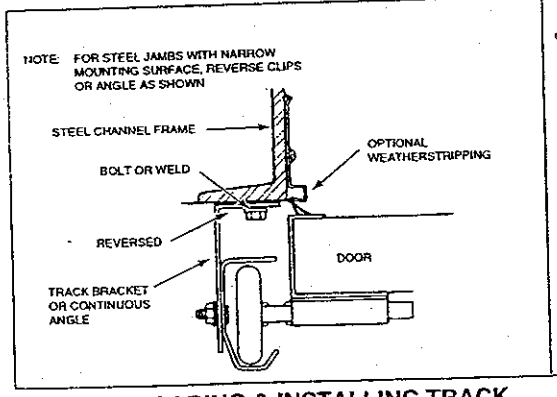

FIGURE (OPTIONAL) CONTINUOUS ANGLE (1" OVERLAP). SPECIAL APPLICATION

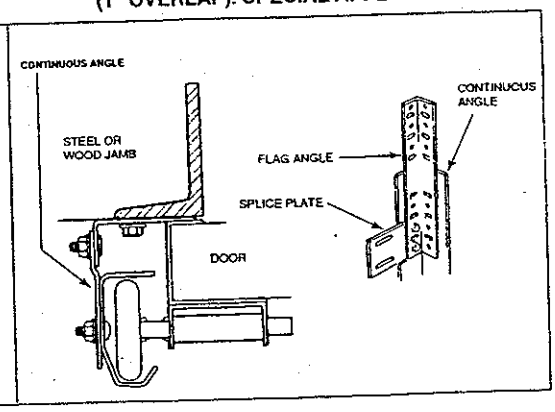

PREPARING & INSTALLING TRACK

STOP

Torsion springs are constructed from high carbon alloy steel and require careful handling. DO NOT drop or drag spring on a hard surface such as a concrete floor. Do not strike with a heavy or sharp object, or allow to come into contact with a welder's torch or stinger.

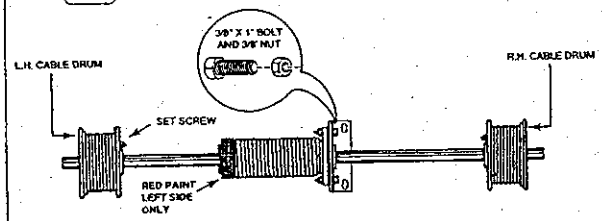

TYPICAL ONE SPRING ARRANGEMENT

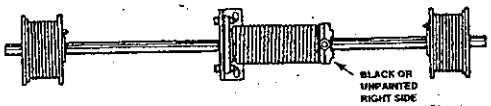

TYPICAL ONE SPRING ARRANGEMENT (WITH BLACK OR UNPAINTED RIGHT SIDE)

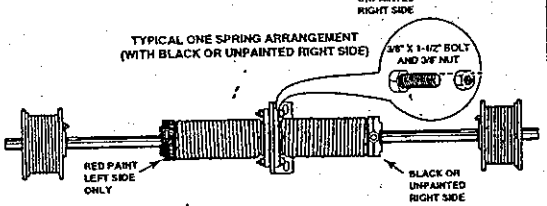

TYPICAL TWO SPRING ARRANGEMENT

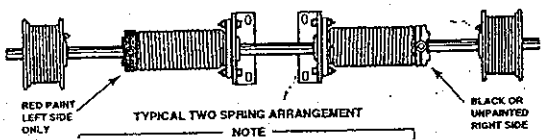

TYPICAL TWO SPRING ARRANGEMENT

NOTE

DOORS OVER 200 SQ. FT. AND DOORS WITH 6" SPRINGS HAVE ONE BEARING BRACKET PER SPRING

INSTALLING TORSION SPRINGS

Assemble and install spring assembly as shown. Carefully examine the spring ends. Red paint is on the L.H. spring winding end. A torsion spring wound the proper direction will get longer in length and smaller in diameter as it is wound. A torsion spring **IMPROPERLY** wound will get shorter in length and larger in diameter as it is wound.

OBSERVE THE RED, UNPAINTED OR BLACK COLOR CODES ON THE SPRING WINDING CONES AND ASSEMBLE CORRECTLY. ALL REFERENCES TO RIGHT OR LEFT ARE VIEWED FROM INSIDE LOOKING OUT THROUGH THE DOOR OPENING.

Note: The torsion spring assembly will have red, unpainted or black spring winding cones. **The red torsion spring will be assembled on the left side of the centre bearing plate. If unpainted or black the torsion spring will be assembled on the right side of the centre bearing plate.** The left cable drum is assembled on the left side. The right cable drum is assembled on the right side. The 3/8" set screws must be installed in the cable drums and the spring winding cones. Do not tighten set screws.

Slide the torsion spring components together on the shaft and assemble as shown, using 3/8" X 1" or 1-1/2" bolts and 3/8" nuts.

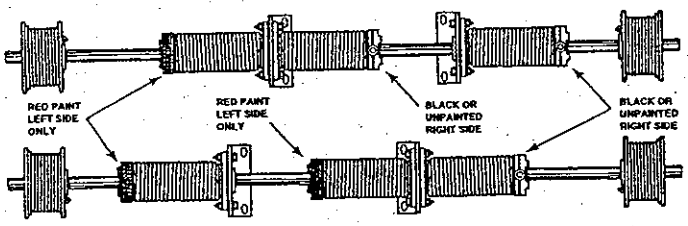

TYPICAL THREE SPRING ARRANGEMENTS
MAY HAVE 2 R.H. SPRINGS & 1 L.H. SPRING
MAY HAVE 2 L.H. SPRINGS & 1 R.H. SPRING

NOTE: Doors supplied with duplex springs (Small diameter spring within larger diameter spring) or doors in excess of 1000 lbs. will be supplied with extra bearing plates which are to be positioned as shown in the diagram below.

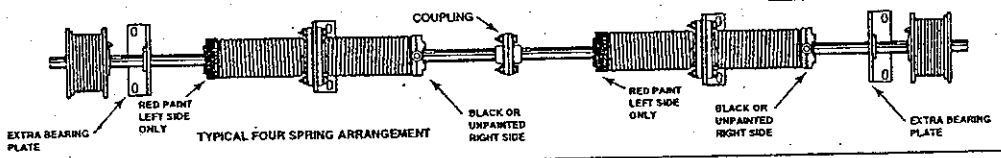

TYPICAL FOUR SPRING ARRANGEMENT

Technical Information

Lift Types

LHR: low headroom hardware
H: total height
h: door height
d: headroom required
p: depth
s: high-lift
e: distance between the ceiling and the top of the track

Conversion: 1 in = 25.4 mm
1ft = 304.8 mm

	HEADROOM (d) REQUIREMENTS				
RADIUS	10"	12"	15"	LHR rear	LHR front
Residential extension	8-1/2"	10"	13"	4"	n.a.
Residential torsion	10"	12"	15"	4"	8"
2" Light Commercial (hollow shaft)	10"	12"	15"	4"	8"
2" Heavy Commercial (solid shaft)	10"	12" 13½" (2)	15"	4"	8" up to12 feet high 10" over 12 feet
3" Industrial			16" 20"(3)	11"	13"
ADD 2" FOR A RESIDENTIAL ELECTRIC OPERATOR ADD 4" FOR A COMMERCIAL TROLLEY OPERATOR					

NOTES :
Up to 12 ft high (400-8 and 400-12 drums only).
(2) For doors over 12 ft (3) 20 in with 800-32 drums

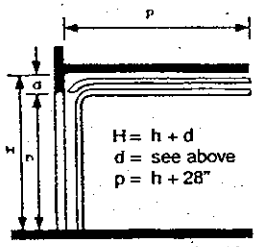

LOW HEADROOM (LHR)

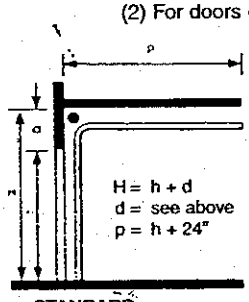

STANDARD

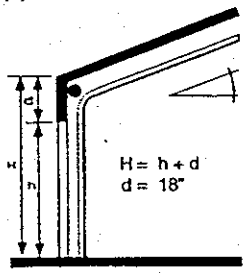

INCLINED

$$h_{max.} = \frac{H + p - 30"}{2}$$

$$p = 2h - H + 30"$$

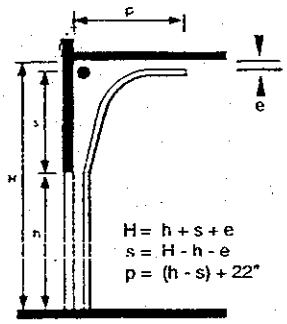

HIGH LIFT(s)

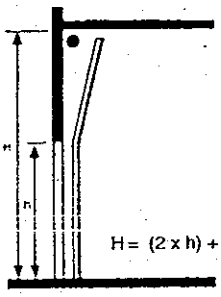

VERTICAL LIFT

Track Protection

TRACK GUARD (L-Style)
60" x 1/4"

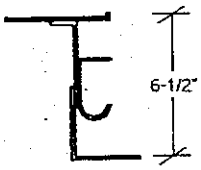

FENDER GUARD (Z-Style)
60" x 1/4"

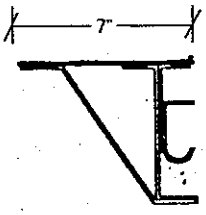

Frames

STEEL JAMB

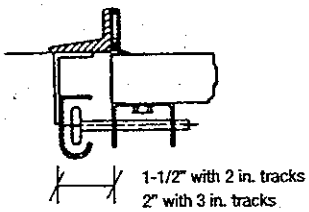

WOOD JAMB

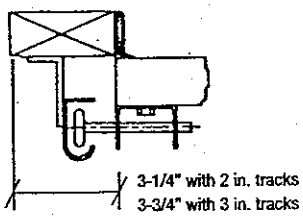

STEP 2
GETTING THE PANELS READY

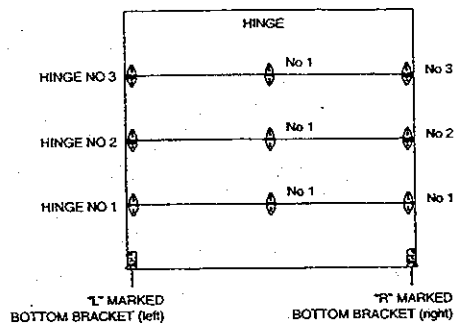

figure 6

Unwrap the panels and place them on two boards of wood with their exterior side down and in the same order as they will be once the door is installed. Make sure you lay the polyethylene foam from the wrapping on the boards so as to avoid scratching the door. Check the factory stamp on the end of each panel in order to identify them. Place the panels evenly, align them well, and tighten them well.

Make a line that goes across the punch marks so as to align and center the hinges well. Mark them and screw in the bottom panel corner brackets as well as the **lower parts** of the hinges. Always make sure you are using the proper hinge for the panel. Be careful also about which screws you are using: the tek screws (self-tapping) are used for the hinges in the middle of the door and the lag screws (wood) for the end hinges (see Figures 6-7-8-9-10). The 5/16" x 1 1/2" lag screws are used for for attaching tracks and center anchor plate to wall, and the 1/4" x 1 1/4" are used to attach the hinges.

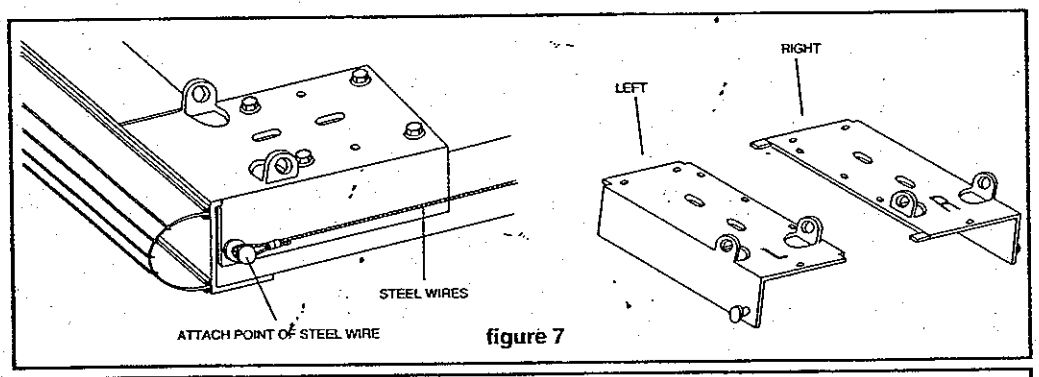

figure 7

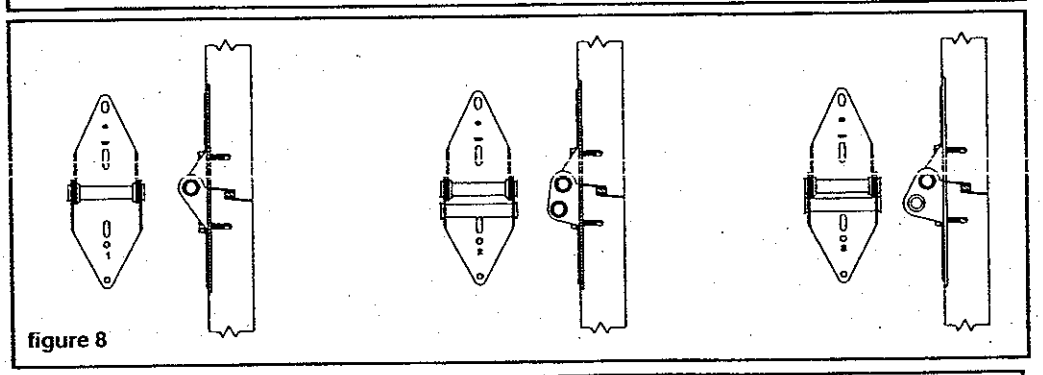
figure 8

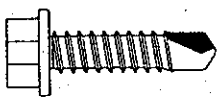
SELF TAPPING SCREW FOR
CENTER HINGES AND HANDLES
figure 9

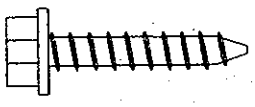
WOOD SCREW FOR END HINGES
AND BOTTOM BRACKETS
figure 10

STEP 3
THE INSTALLATION OF THE PANELS

Center the bottom panel in the opening by pressing it firmly against the ground and by making sure that the top of the panel is really level. If necessary, place a wooden wedge to keep the panel level. Centering the panel enables you to locate the exact place where you should screw the vertical track into the interior jamb.

It is of the utmost importance that the top ends of the vertical tracks be level. In order to achieve this, you might have to lift one of the vertical tracks or cut the other. You must execute this step at this point, before screwing in the tracks.

Screw the right track into the jamb, at 1/2" (13 mm) from the floor, by leaving 6 mm (1/4") between the track and the end of the panel.

Put the rollers into the right hinge and into the right corner bracket of the bottom panel (Figure 11). If the hinge has two holes, always use the one farthest from the door. Lift the panel, ease the rollers into the track, and place the panel parallel to the opening, on the ground, at the exact location it will be at the end of the installation (Figure 12). Make sure everything is square with the track and level.

Put the roller into the hinge located in the top right corner of the second panel. Lift the panel, ease the roller into the right track. Then lay the second panel on the first one and screw the hinges in.

Repeat the same steps for the remaining panels.

Put the rollers into the left corner bracket of the bottom panel as well as into the left hinges of the panels. Ease the left vertical track over these rollers and screw the track into the left jamb by leaving the same 13 mm (1/2") between the track and the door as on the right side.

Standard 138

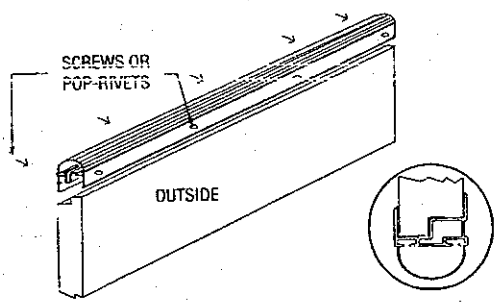

Stand the panel on its side and push the moulding on the panel. To fix the moulding to the panel, drill moulding and panel with a drill bit the size of your pop rivets, or screw directly with weatherstripping screws #8 x 1". Place first one at 6" from the end and spread evenly at approximately every 24" on the exterior, and 16" on the inside.

N.B. Do not place screws where reinforcement plates are marked with red stickers on the inside of the panel.

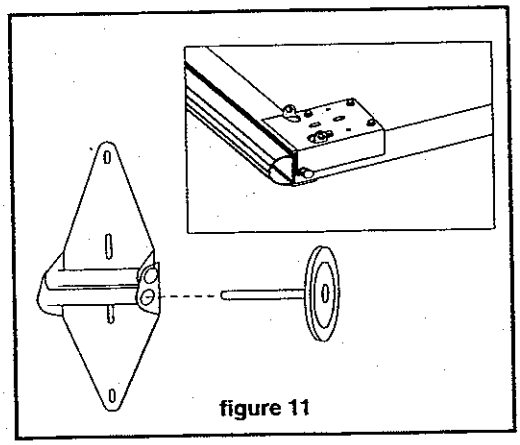
figure 11

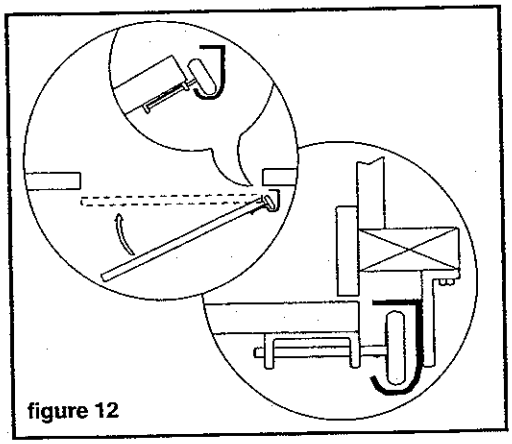
figure 12

N.B. The internal structure of GARAGA doors measuring at least 3,658 mm (12 feet) in width allows for the installation of double hinges at the end of the panels. The rollers with long rods are only available as options in the hardware package.

Once the door is installed, you simply add the second set of hinges by sliding them into the long rods of the hinges which have already been installed and by screwing them in next to those already in place. The use of these additional hinges is simply to reinforce and make for a smoother opening and closing of the door (see page 23, Figure 29 for the illustration).

IMPORTANT - IMPORTANT - IMPORTANT

The vertical tracks must be parallel. In other words, the distance between the tracks must be the same at the top and at the bottom.

The top of the vertical tracks must be level as compared to each other. This can be checked by measuring the distance between the top of the door and the top of the track. If they are not level, cut the bottom of one of the tracks or lift the other.

STEP 4
THE INSTALLATION OF THE HORIZONTAL TRACKS

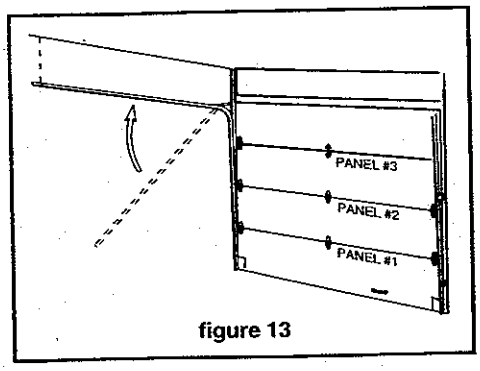

figure 13

Install the horizontal tracks as shown. (Fig. 13)

Fasten (Figure 14) the steel angle of the horizontal track to the specially designed bracket of the vertical track with the 8 mm X 19 mm (5/16" X 3/4") bolts.

Then, fasten (Figure 14) the curved part of the horizontal track to the vertical track using the track bolts (Figure 15).

Temporarily tie the horizontal track to the ceiling by using a steel wire.

Put the rollers into the upper brackets (Figure 16); ease the rollers into the track and slide down the bracket. Fasten these brackets in order to have the axle of the rollers at about 4" (100 mm) from the top of the section, and leaving the same space between the door and the track as for the hinges.

Install the rear hangers (Figure 18). Align the horizontal tracks with the door header and keep exactly the same distance between the tracks. This particular point can be checked by measuring the diagonals, as shown in Figure 17. There must be a slight upward slope in the horizontal tracks: 10 mm per 1,000 mm in door height (1/8" per foot).

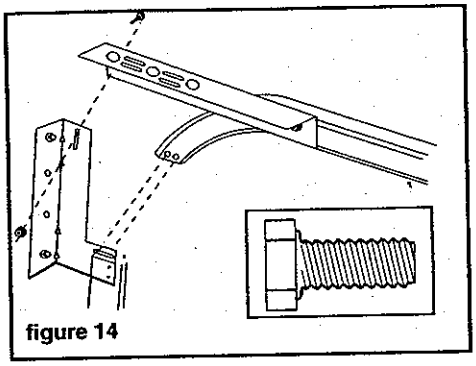
figure 14

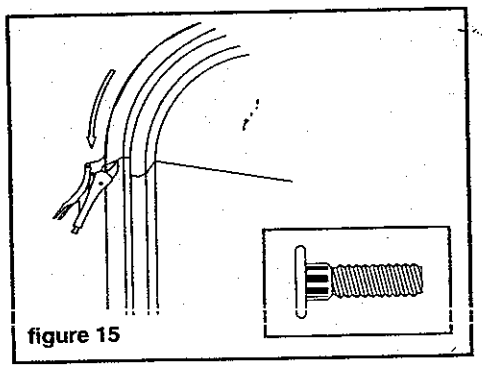
figure 15

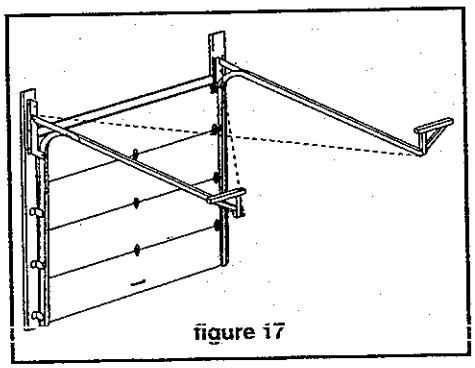
figure 17

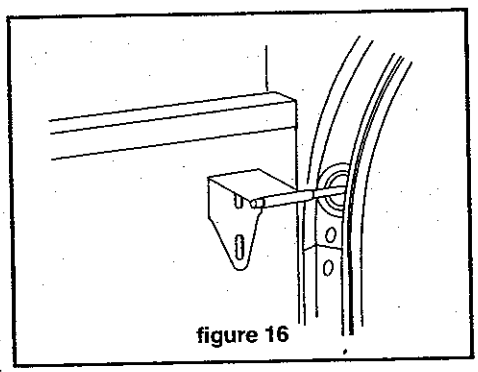
figure 16

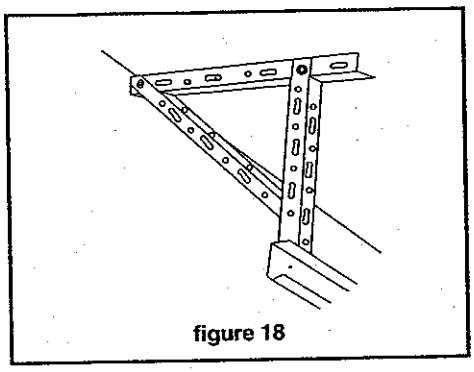
figure 18

IF YOU ARE USING HARDWARE FOR EXTENSION SPRINGS, GO TO PAGE 19.

STEP 5
THE INSTALLATION OF THE TORSION SPRING AND THE CABLES

Keep the door closed.

Assemble the cable drums, the end bearing plates, and the shaft or the tube that has already been mounted with its spring as shown (Figure 19).

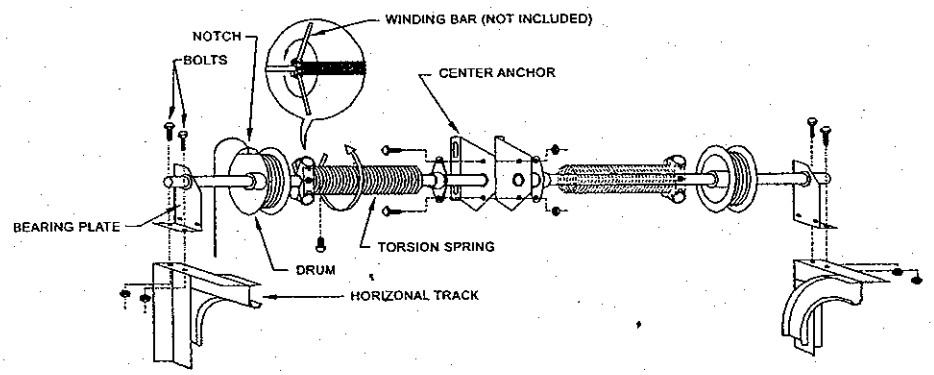

figure 19

NOTICE THE CENTER TORSION SPRING ANCHOR PLATE: THE CUT CORNER MUST BE THE LOWER CORNER.

The drums are marked LH and RH; LH goes on the left side and RH goes on the right side, as seen from the inside of the garage. They could also be identified by red or black paint; in this case, the black goes on the right and the red goes on the left.

Raise the torsion spring assembly above the tracks. Bolt the end bearing plates to the horizontal tracks with 5/16" X 3/4" bolts. Firmly fasten the center anchor plate to the header; this is the base for the tension of the springs. The shaft has to be straight and level. Press the drums on the end bearing plates without tightening them.

Fasten the loop of the steel cable to its fastening point on the bottom panel corner bracket (Figure 20) and make it run between the door and the track up to the cable drum. Hook the end of the cable with a stop sleeve to the special notch on the drum. In order to have an identical tension on both cables, lock the shaft with a pair of locking pliers braced against the header (Figure 21), turn the drums manually until there is tension in the cables, lock them with the specially designed pressure screws on the drum. Repeat this step for the other cable.

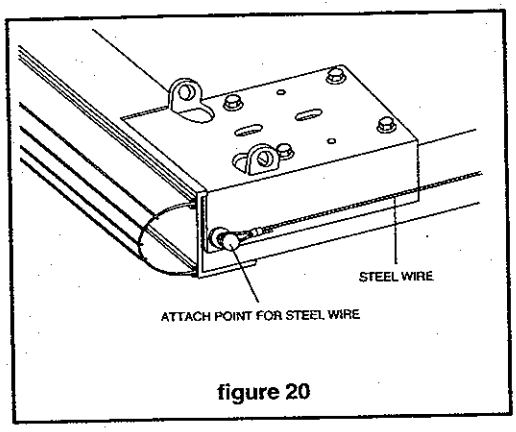

figure 20

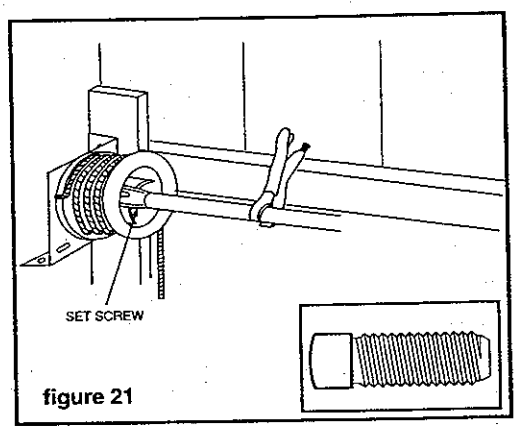

figure 21

WARNING! THE NEXT STEP (WINDING THE TORSION SPRING) CALLS FOR EXTREME PRECAUTION: CARELESSNESS COULD LEAD TO SERIOUS INJURIES.

While leaving the locking pliers tightened to the shaft and braced to the header, loosen the pressure screws on the winding cone of the spring. Then use the winding rod (NOT INCLUDED) to wind the spring by turning the winding cone TOWARDS THE CEILING (Figure 22) the number of times written on the sticker found on the center anchor plate. The winding rods must have the same diameter as the holes on the winding cone and must be pushed in as far as possible into these holes. **NEVER USE SCREWDRIVERS FOR THIS STEP.**

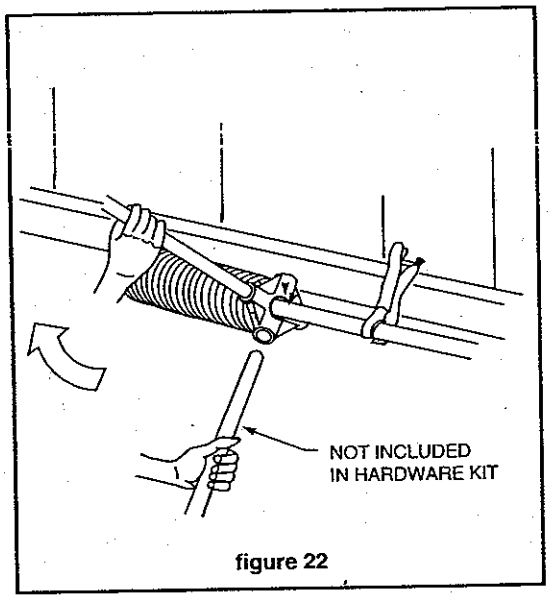

figure 22

To make keeping track of the number of turns of the spring easier, it is useful to make a line with a pencil on the winding cone. Remember that each hole on the winding cone is one quarter of a turn. The number of turns will be approximately as follows:

Height of the door	Number of turns
1,981 mm (6'6")	7.0
2,134 mm (7'0")	7.5
2,438 mm (8'0")	8.5

If there are two springs, proceed the same way for the second one with the same number of turns.

NEVER TAKE THE WINDING ROD WITH THE TENSION OUT OF ITS HOLE UNTIL THE OTHER WINDING ROD IS WELL IN ITS PLACE AND THAT YOU ARE HOLDING IT FIRMLY. YOU MUST BE VERY CAREFUL AT THIS POINT.

After having tightened everything carefully, remove the winding rods and the locking pliers.

You can now check if the door is well-balanced; ideally, it should stabilize where you stop pushing it up or pulling it down. The "net" weight of a door, regardless of its size, should never exceed 10 pounds.

A slight tendency to go up or down does not matter. However, if the door opens by itself as soon as you let it go or if it closes too fast and hits the floor hard, you will have do adjust the spring accordingly.

Before proceeding to this adjustment, close the door, lock it, lock the spring shaft with a pair of locking pliers, insert a winding rod into a hole of the winding cone, hold it tightly, and only then can you loosen the pressure screw of the winding cone. Make the winding rod go downward if the door was going up alone; or push the winding rod upward if the door was going down by itself.

Add or take off 1/2 a turn at a time, one spring at a time if there are two, and check. Most of all, do not forget to tighten the pressure screw before taking out the winding rods.

LOW HEADROOM HARDWARE

The low headroom hardware allows to install a sectionnal overhead garage door whererever the free space between the header and the ceiling or the trusses is less than 10".

The use of double horizontal tracks that make the top section turns quicker decrease the required space: a 4" free headroom allows the installation of the door (6" if an electric operator will be used).

The installation technique is similar to the one used for standard hardware. The only differents pieces are the horizontal tracks, the bottom brackets (they may be in one or two pieces), and the brackets for the top rollers.

The L.H.R. hardware are made in both torsion or extension spring system, in the torsion system, the spring(s) are rear mounted, as shown farther.

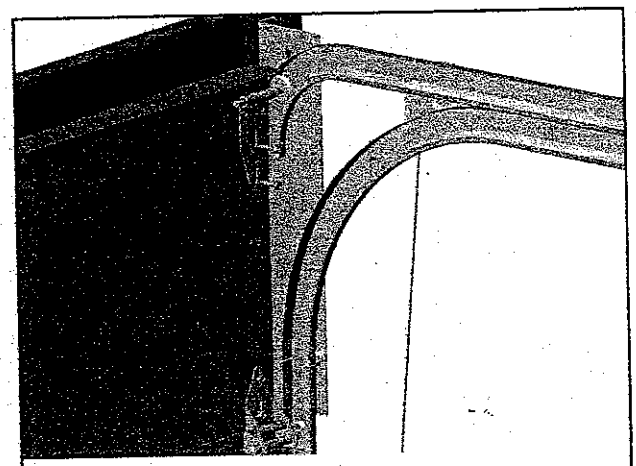

Top bracket installation

The position of the drums for the torsion system, and of the springs in the extension system, require to install the steel cables outside the tracks, through the pulleys, and to the bottom brackets. The cables position is one of the main difference with the standard system.

IMPORTANT INSTALLATION TIP:

To make the installation easier, and give a better access to the drums set screws, i.e. the left drum will be installed on the right drum will be installed on the left side. (See figure 19, page 16, for spring assembling instructions.)

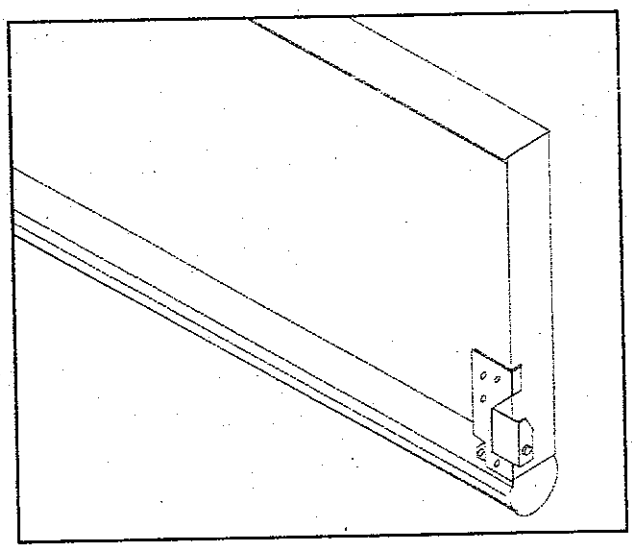

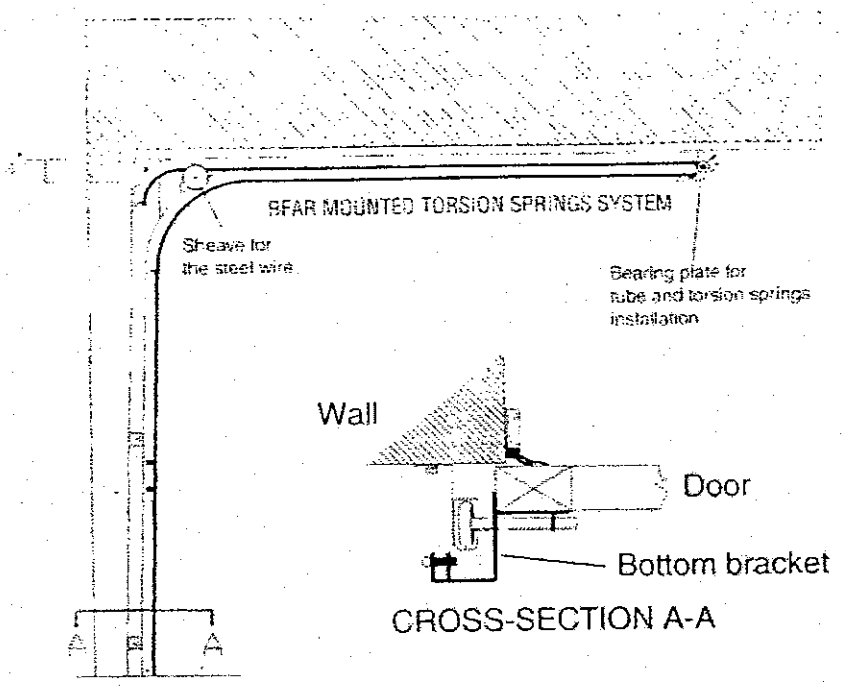

Low headroom door with back spring system

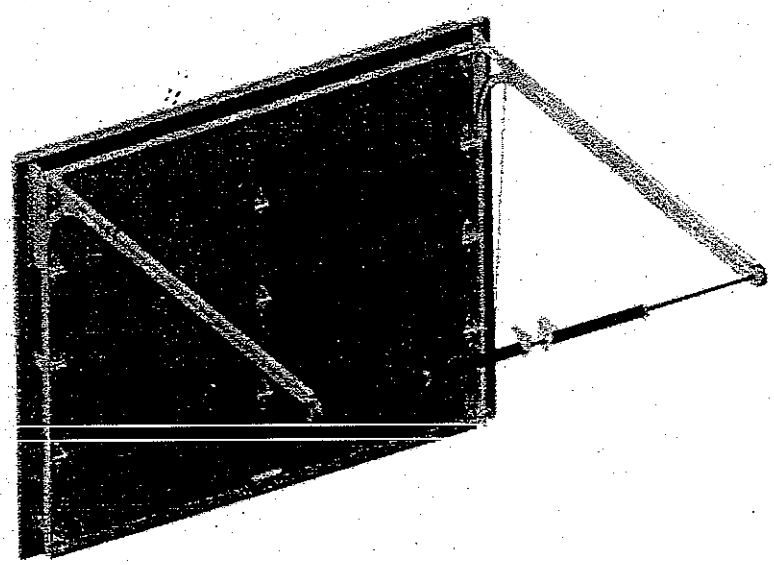

OPTIONAL HIGH LIFT, & VERTICAL LIFT DOOR INSTALLATION

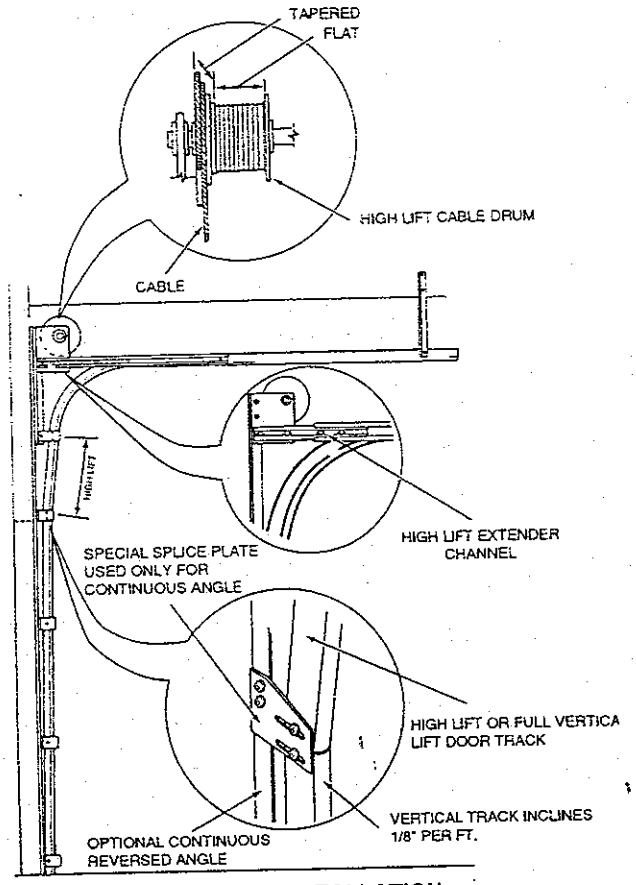

HIGH LIFT DOOR INSTALLATION

HIGH LIFT:
The Cable drums which are supplied with high lift hardware are tapered as shown. The cable must be positioned to allow it to fall onto the flat position of the drum when the door is lifted equal to the amount of high lift.
eg. The cable on a door manufactured with 48" of high lift must fall onto the flat portion of the cable drum when the door is lifted up 48" off the floor.

VERTICAL LIFT:
The cable drums for vertical lift doors are fully tapered and the cable must fall onto smallest portion when door is fully open.

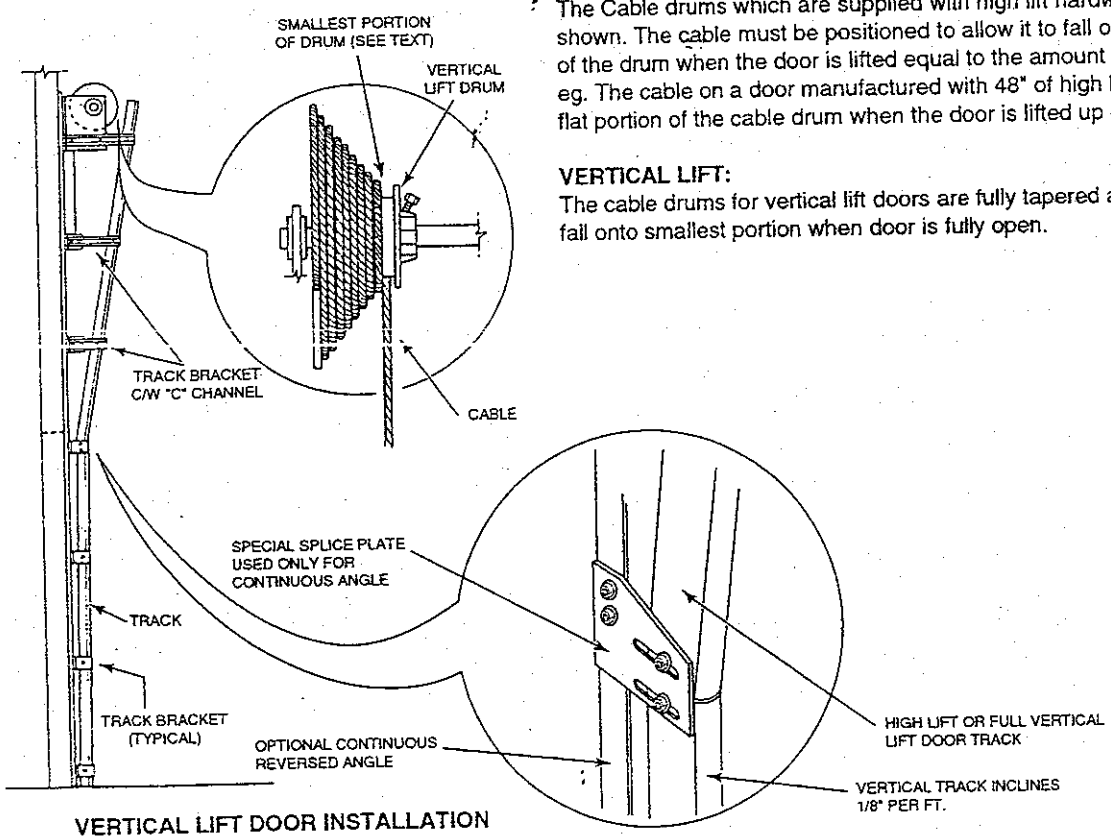

VERTICAL LIFT DOOR INSTALLATION

HARDWARE LIFT VARIETIES

MISCELLANEAOUS: INSTALLATION OF HORIZONTAL REINFORCEMENTS FOR DOORS OF 12' - 4" (3759 mm)

Garaga installs in plant, on doors model Top Tech, H-Tech Plus and H-Tech 10 feet wide and more an aluminum extrusion, with an horizontal protection or not according to model, as a top weatherstripping retainer and longitudinal reinforcement strut (see figure 32).

Standard + and Standard 138

There is no top weatherstripping on Standard + and Standard 138 model. They are available, non installed, as an option.

Garaga hardware includes as standard equipement, for doors 12' 4" and more, 3 reinforcement struts (4 struts for 5 panels doors), which are used for the same purpose of longitudinal reinforcement.

Figure 29 shows how they are installed. More explicitly, they are fastened to the top of the panels with the provided clips which are screwed in at the same time as the hinges. Another, more efficient, way of installing them consists in piercing the struts at the same location as the holes in the hinges and screw them directly in these, without any clips. Self tapping screws are not supplied.

Struts position on door

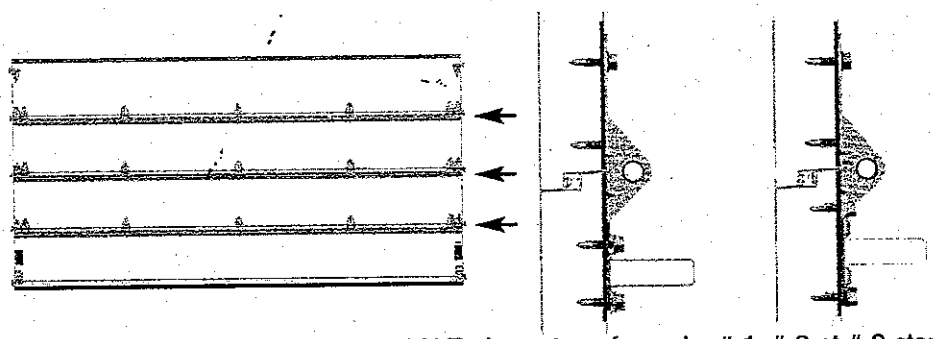

- Models Top Tech, H-Tech Plus and H-Tech: on top of panels # 1, # 2 et # 3 starting from bottom panels.

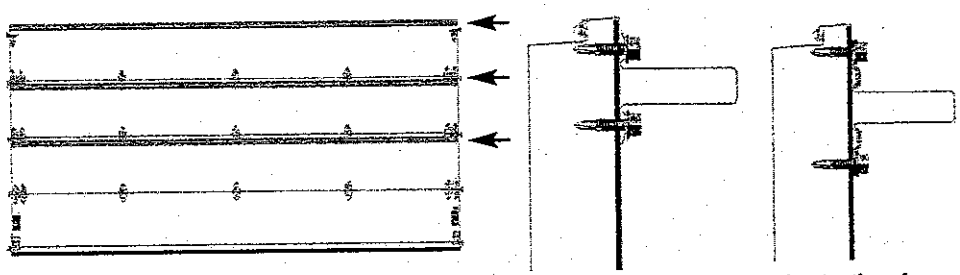

- Models Standard + et Standard 138: on top of panels # 2, # 3 et # 4. starting from bottom panels. (Note: Self tapping screws for top section are not supplied)

figure 35

MISCELLANEOUS:
THE INSTALLATION OF THE WEATHERSTRIPPING

GARAGA INC. offers heavy-duty weatherstripping to its clients. This weatherstripping features a screw cover and a high quality double edge rubber strip which resists to temperatures of -30°C and keeps its flexibility.

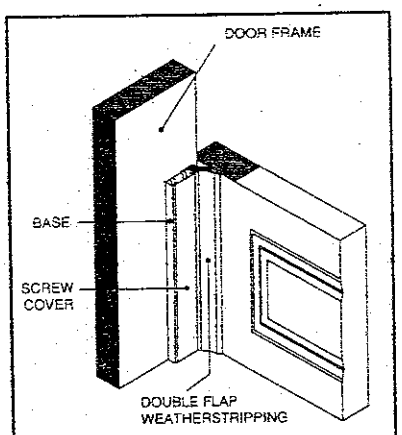

figure 31

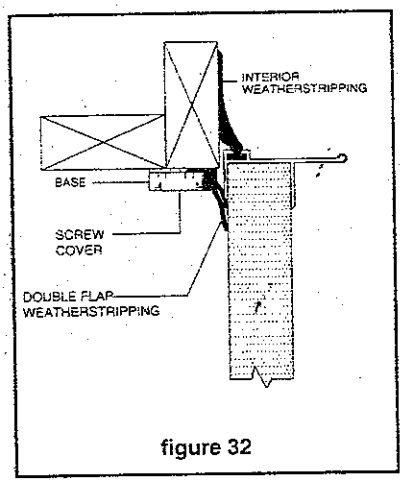

figure 32

INSTALLATION
(note: screws are note included)

- close the garage door;
- measure and cut the base and the top panel weatherstripping to the desired length;
- make sure that the end of the top panel weatherstripping is even with the end of the base;
- start by the sides of the door, and not by the top;
- place the base of the weatherstripping flat against the door frame, slide it upward to press well against the horizontal frame; then move it towards the door until both edges of the top panel weatherstripping come against the door while keeping the base of the weatherstripping at around 1/2" from the door;
- screw in and tighten a screw in the first hole of the base of the weatherstripping while being careful to place the top panel weatherstripping under the base of the weatherstripping;
- make sure the weatherstripping is parallel to the door and then put in the other screws;
- fix screws in **all** the holes of the weatherstripping retainer.
- do not tighten the screws completely, to allow the retainer to slide and adjust a little : this is the reason why there are long slots in the base. Crushing the base too hard will put much pressure on the wall of the retainer, which could bring the screw-cover to pop out the retainer.
- put the screws at the center of the slots, to allow movement of the retainer.
- **very important**: leave a space of at least 1/8 inch (3 mm) at the top joint, and fill it with caulking, using the same colour as the weatherstripping. This filling will absorb the expansion or will stretch to fill the space if it contracts.
- put on the screw cover by inserting one side of the screw cover in the base and by pushing the other side firmly;
- proceed in the same way for the sides.

If you have chosen the weatherstripping with an aluminum base instead of a PVC base, you will have to pierce holes of 1/8" at every 12" for the screws.

To make sliding the weatherstripping on the door easier, you can lubricate them with a SILICONE-based product. **NEVER USE A PETROLEUM-BASED LUBRICANT ON WEATHERSTRIPPING.**

MISCELLANEOUS:
THE INSTALLATION OF THE CENTRAL BAR-LOCK

The lock and the handle for the central bar-lock are fastened to the wood block placed in the center of the panel marked "bar-lock". A red dot shows the position fo this block of 20 X 8 mm (8" X 3").

Standard 138

Installation of a bar lock is impossible on a Standard 138. One has to install a cable-lock, or an end stile lock .

Remember it is not only useless, but even inadvisable, to install any lock system if you have an electrical operator on your door. There is then an important possibility of damage or injury if the door is opened with the operator when the lock system is on.

Pierce the holes needed for the installation of the barrel and the handle by using the scale-size diagram which is found on the inside cover at the end of the manual.

Put the barrel in by the outside and hold it there with the metal part and the bolts provide for this purpose. Then, fasten the lock as shown on the diagram. Insert the rod for the outdoor handle into the upper hole and through the revolving plate to which the rods for the lock are linked; fasten the inside handle there (Figure 34).

Slide the guides into the rods for the lock and screw them at each end of the door (Figure 34). Make sure the rods move freely in the holes designed for this purpose in the vertical tracks. Place the return spring for the rods.

INSTALLATION OF THE SIDE LOCK (Figure 33)

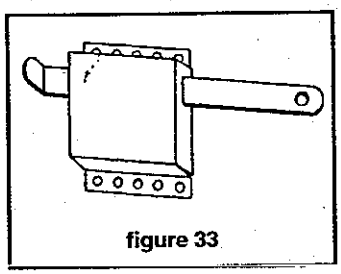

figure 33

Place the case of the lock in such a way that the lock moves freely in the hole designed for this purpose in the vertical track.

Fasten the case to the wood block at the end of the door with the lag screws (wood).

Repeat these steps for the other end of the door.

N.B.: IF YOU ARE INSTALLING AN ELECTRIC GARAGE DOOR OPENER, IT IS USELESS AND EVEN DANGEROUS TO USE SUCH A LOCK SYSTEM.

BAR-LOCK

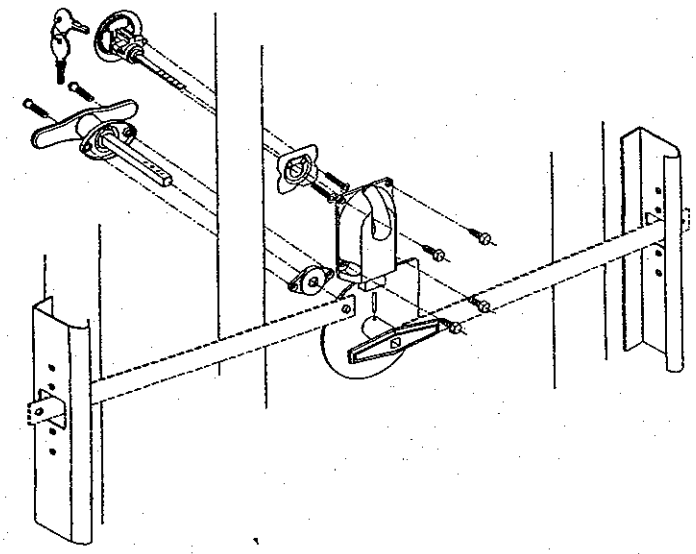

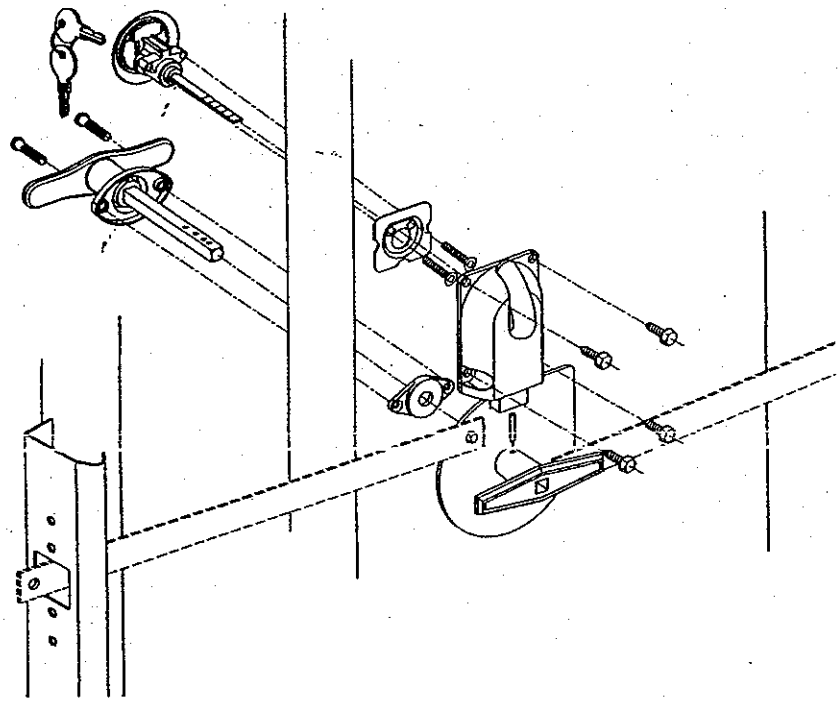

See template in central page

figure 34

CABLE LOCK (Standard 138)

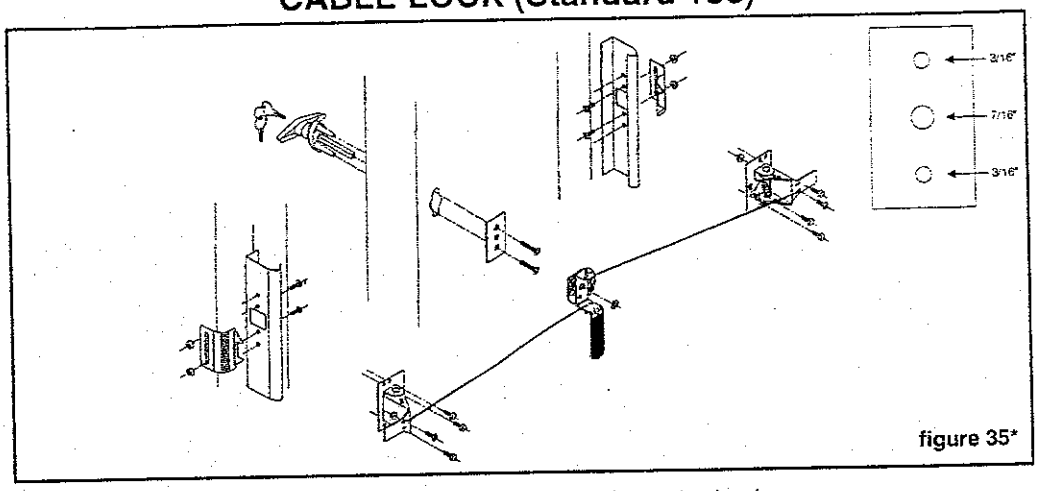

figure 35*

* one latch for torsion spring hardware. two latches for extension spring hardware

CABLE LOCK

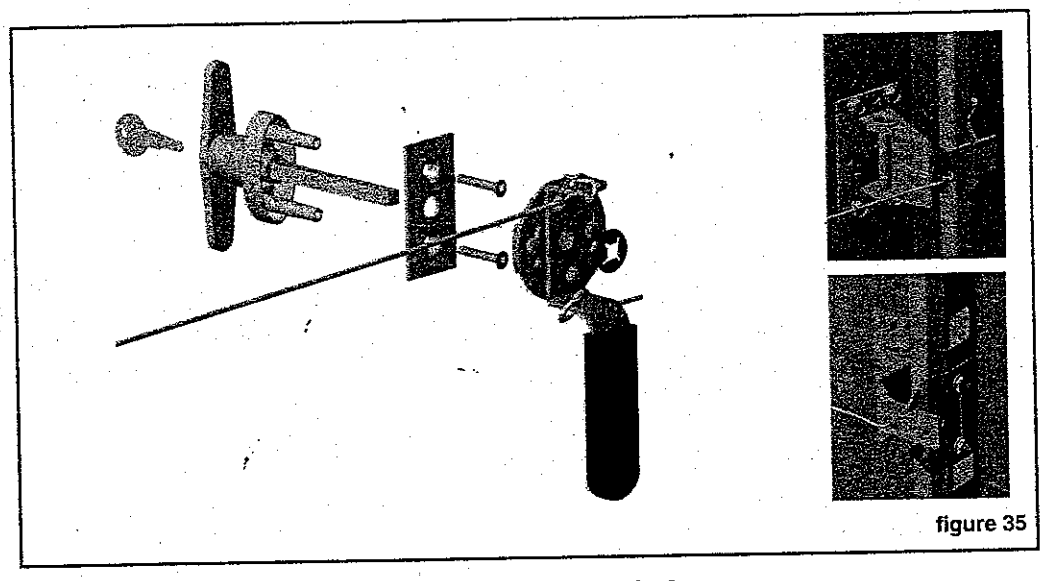

figure 35

END STILE LOCK

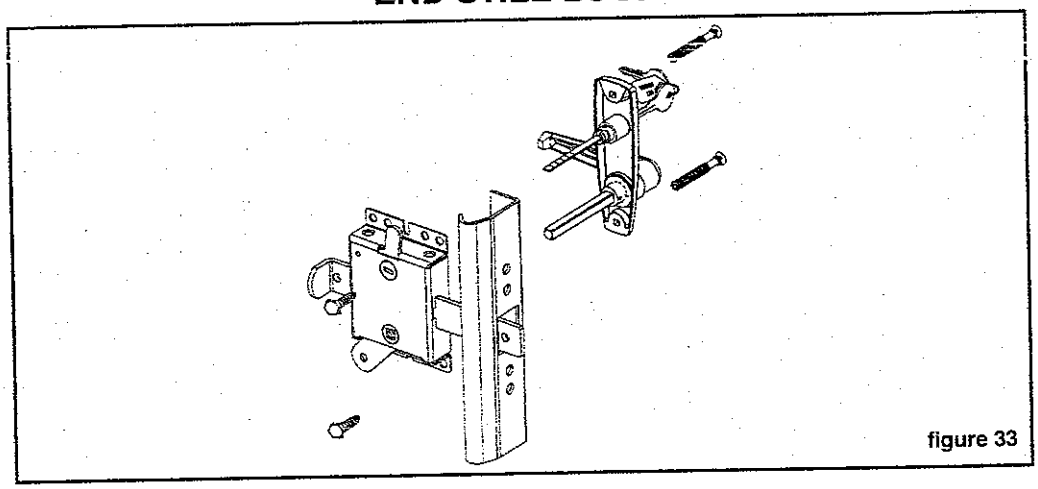

figure 33

CONDENSATION... A REALITY

The Facts:

The accumulation of condensation will occur when water comes into contact with a colder surface than the surrounding temperature. The water may take the form of actual drops of water or frost.

It is important to first realize that a garage door cannot be as watertight as an entry door, and that it is faced with different situations:

- A garage door must be disengaged on all 4 sides in order to open.
- A garage door is made up of 4 panels, thus 5 areas as well as the sides of the door will allow air to enter.
- The size of a garage door (108"-192" wide) is not comparable to that of entry door (34"). The surface area can easily be 4 to 5 times that of an entry door, and therefore offers a larger surface to cooling.
- The garage is a more humid area than the entry-way of a house: snow and ice stuck to a car, fire wood being stored, poor or no ventilation, etc.

Traces of condention may appear in different locations, on the warm side of the door:

- at the point where panel intersect;
- at the end of each panel, behind the weatherstripping;
- on the aluminium U-bar, on the bottom panel.

The solutions:

The source of condensation (cold-hot contact) cannot be eliminated, so GARAGA Inc. proposes a set of solutions at the fore front of the industry designed to minimize the effects:

1) A high-efficiency impermeable joint between the panel, coupled with a thermal-break (the interior and exterior skins do not touch).
2) Rubber weatherstripping on the bottom section that is flexible enough to adapt to the unevenness of the floor. The aluminium U-bar to which the weatherstripping is attache is a heat-conductor, that can cause condensation if the air in the garage
3) A large piece of weatherstripping is attached ot the top of the door to compensate for any deficiencies in the exterior weatherstripping.
4) Exterior double weatherstripping, higher efficiency than regular weatherstripping, is recommanded to stop the infiltration of air.

Excess humidity is the garage can be eliminated by leaving the door open for a few minutes; cold air will quickly fill the garage, thus elimination humidity.

Garaga garage door are products of very high quality. Please do not hesitate to contact your salesperson-installer for solutions to any problems that may occur of if you whould have any general questions.

WARNING: It is useless to "Crush" the weather-stripping against the door. It will prevent the smooth operation of the door. For a smooth operation of the weather-stripping, we recommend the use of a silicon-based lubricant. Do not use "Vaseline" of other petroleum-based oils.

EXTERIOR TEMPERATURE (°C)	HUMIDTY FACTOR MAXIMUM TOLERABILITY (%)
-29	20
-23	25
-18	30
-12	35
- 7	40

TROUBLESHOOTING

1- The door becomes very heavy and only goes up halfway.

The torsion spring(s) has been installed backwards; see step 5.

2- The door opens very fast and is hard to bring back down.

The spring has been wound too much, it is too tight. Adjust the tension. See step 5 or 5.1, according to the type of spring.

3- The door closes fast and is hard to lift.

The spring has not been wound enough, it is too loose. Adjust the tension. See step 5 or 5.1, according to the type of spring.

4- The door works well but it goes back up 2 to 3 inches.

The spring is a little too tight. Adjust the tension. See step 5 or 5.1, according to the type of spring.

5- The door does not close completely flush with the ground.

One of the cables is tighter (has more tension) than the other. Or else, the floor is not square with the vertical tracks.

Adjust the cables. If it is a problem with the floor, you will have to make a level threshold.

6- The door is hard to open at first.

The weatherstripping is too tight. Loosen it and place it a little farther from the door (the base of the weatherstripping should be at about 1/2" from the door).

7- The door is hard to open at the end.

The horizontal tracks are not perpendicular with the axis of the door. Use a tape measure to check this out. See Figure 17.

8- The top panel does not close completely.

Adjust the position of the upper brackets. See Figure 16.

MISCELLANEOUS:
MAINTAINING YOUR GARAGE DOOR

1) **The door** – Wash the door at least 3 times a year. Use a gentle soap (dishwashing liquid) with the brush you use for your car. Avoid abrasive cleaners (ex.: Spic'n' Span), or strong liquid soaps. The use of car wax (ex.: Nu Finish) once a year will revitalize your door, which will spend the year being confronted with ultra-violet rays and acid rain.

2) **Weatherstripping** – The weatherstripping is made of quality P.V.C. rubber and therefore should be cleaned with an all-purpose vinyl cleanser (ex.: Spay-Nine), as you would use on your patio furniture. Lubricate the weatherstripping every 2 months (more frequently for high usage doors) with a silicon-based oil (ex.: Jig-A-Loo). Do not use petroleum-based oils (ex.: WD-40, Vaseline) as this will cause loss of elasticity. Petroleum attacks the rubber and decreases its flexibility.

3) **Track, hinges, rollers** – Lubricate the rollers and hinges with a small amount of motor oil (ex.: 10W30). Do not apply excessive WD-40 as it acts as a degreaser as well as a lubricant. For the track, use a small amount of grease (as you would use for your car), removing the old grease with a rag. Apply this grease primarily in the curve of the track. Using grease will result in the quieter operation of your door (as both the rollers and track are steel).

4) **Automatic garage door opener** – Lightly lubricate, with motor oil, the track that holds the chain or cable. Carefully read the instructions provided by the manufacturer, as special lubricants may be recommended.

   Warning – Every 3 months disconnect the opener (pull the cord) and open the door by hand several times. If you have difficulty opening the door, your opener will have the same difficulty, and you should therefore contact a professional installer (see yellow pages "Doors-overhead type").

   This difficulty could be caused by a number factors including: warped track, a disengaged cable, or a problem with the spring.

   It is also possible to adjust the door yourself if the door is not closing properly. Consult the operation guide provided by the manufacturer of the opener, as many openers have simple adjustment buttons.

   A special note: When you are leaving on vacation, unplug your opener. It is not advisable to use a side-lock to lock your door when the opener is connected, as this could cause serious problems with the motor if the opener is inadvertantly activated.

5) **A final word** – Consider your garage door as an important part of your home. Proper maintenance will result in problem-free operation. If you are not interested in personally performing the required maintenance, have it completed by your Garaga installer annually. The bottom brackets are directly linked to the springs allowing the easy operation of the door. It is therefore submitted to tremendous mechanical power and represents a potential danger. Always call your Garaga dealer.

1.- **General information**

1) Sico, Benjamin Moore, Gentek, Color Your World and Residential Royal colour codes.
If your customers want to paint their front door and/or windows, it is possible to closely reproduce the colour to their Garaga door. See next page.

2) Painting your Garaga door – If you decide to paint your Garaga door yourself, the following instructions outline how to do it. It is important to note that oil-based paint (alkaloid) with a mat or semi-gloss finish does not exist in the market (unless an industrial paint is used).

Therefore, it is recommended that latex paint be used to avoid highlighting imperfections in the metal. Use a brush to contour the raised panel, and a roller to provide a nice finish.

We have used the Sico or Benjamin Moore paint companies, but any good paint company can be used, with the stages remaining the same. Some dealers are equipped with an electronic machine to find the exact colouration. A door sample will be necessary.

2.- **How to repaint a Garaga Door**

Here is the general process to follow to change the colour of a Garaga door:

1) Sand the surface of each panel with sand-paper (grade #220) to remove most of the gloss. Do not sand to naked metal. Do not use wood steel, wich would leave stell particles.

2) Wash the surface of each panel with Sicosol #875-104 or with "phosphate trisodium" to remove grease and residue.

3) Apply a coat of latex paint, the colour of your choice

ELECTRIC OPERATOR INSTALLATION

Please consult the installation manual supplied by the operator manufacturer.

Note that the screws attaching the pulling rod to the door are not supplied. You will need 2 self tapping screws. See with your Garaga dealer. See page 6 for location of the reinforcement plate for operator.

Standard 138

In order to install an electric operator, you must first fix a steel angle between the two reinforcement plates of the top section (see page 6 for location) with self tapping metal screws. Once the steel angle installed, you can attach the pull-bar of the operator to the steel angle. You can use steel perforated angle, but we recommend the use of the operator bracket (see to the right) designed for this purpose, and available at your Garaga dealer.

GARAGA

«Garaga, a choice you'll never regret!»

This manual is available on our web site

www.garaga.com